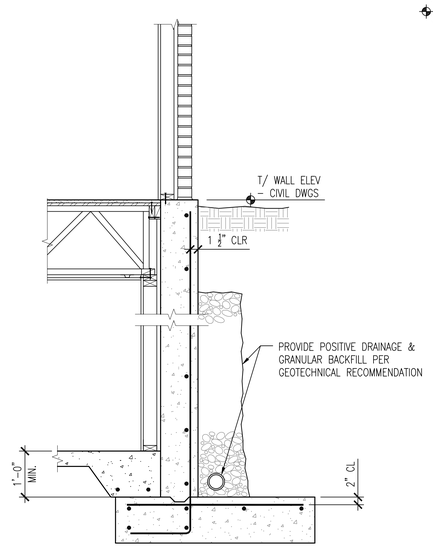

SEE 20/S5-02 FOR ADDITIONAL INFO

10 S5-03 RETAINING WALL ADJACENT TO BUILDING
SCALE: 3/4" = 1'-0"

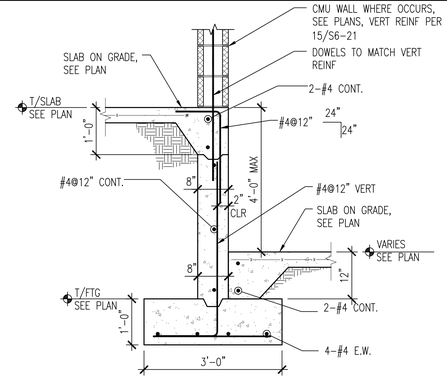

5 S5-03 SECTION @ STEP IN SLAB ON GRADE
SCALE: 3/4" = 1'-0"

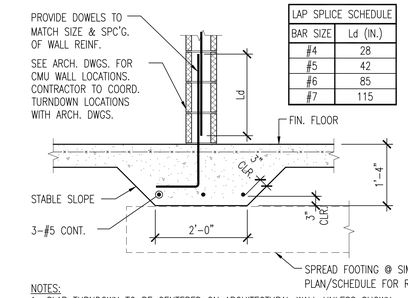

LAP SPLICE SCHEDULE	
BAR SIZE	Ld (IN.)
#4	28
#5	42
#6	85
#7	115

NOTES:
1. SLAB TURNDOWN TO BE CENTERED ON ARCHITECTURAL WALL UNLESS SHOWN OTHERWISE.
2. GENERAL CONTRACTOR IS RESPONSIBLE FOR COORDINATING TURNDOWN LOCATIONS WITH CMU WALL LOCATIONS AS SHOWN ON ARCHITECTURAL DRAWINGS. PROVIDE TURNDOWNS WHERE REQUIRED WHETHER SHOWN ON STRUCTURAL DRAWINGS OR NOT.

1 S5-03 TYPICAL DETAIL – SLAB ON GRADE TURNDOWN AT NON-LOAD BEARING CMU WALL
SCALE: 3/4" = 1'-0"

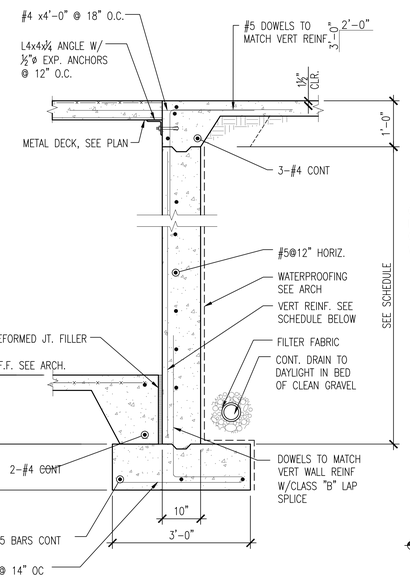

VERTICAL REINF. SCHEDULE	
H ≤ 12'-0"	#5 @ 10" O.C.
H ≤ 14'-0"	#5 @ 8" O.C.

BRACE CONCRETE WALL UNTIL S.O.G. IS PLACED AND REACHES DESIGN STRENGTH SEE GENERAL NOTES FOR ADDITIONAL INFO

7 S5-03 TYP. BASEMENT WALL SECTION
SCALE: 3/4" = 1'-0"

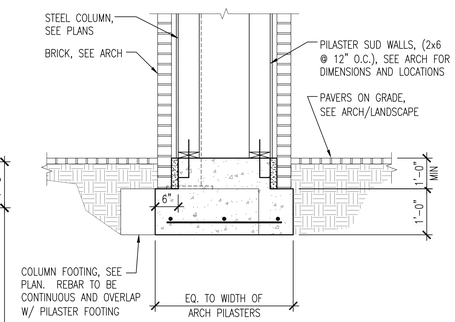

2 S5-03 SECTION @ BRICK PILASTER
SCALE: 3/4" = 1'-0"

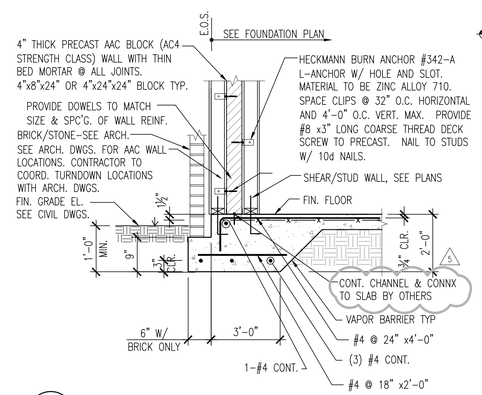

11 S5-03 SECTION AT DRIVE UNDER
SCALE: 3/4" = 1'-0"

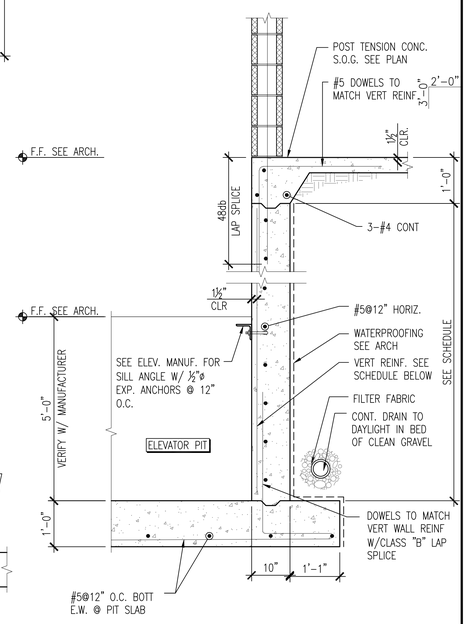

VERTICAL REINF. SCHEDULE	
H ≤ 12'-0"	#5 @ 10" O.C.
H ≤ 17'-0"	#6 @ 8" O.C.

BRACE CONCRETE WALL UNTIL S.O.G. IS PLACED AND REACHES DESIGN STRENGTH SEE GENERAL NOTES FOR ADDITIONAL INFO

4 S5-03 BASEMENT WALL SECTION @ ELEVATOR
SCALE: 3/4" = 1'-0"

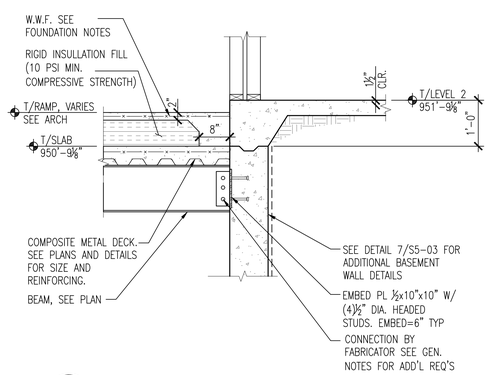

12 S5-03 BEAM CONNX TO BASEMENT WALL SECTION
SCALE: 3/4" = 1'-0"

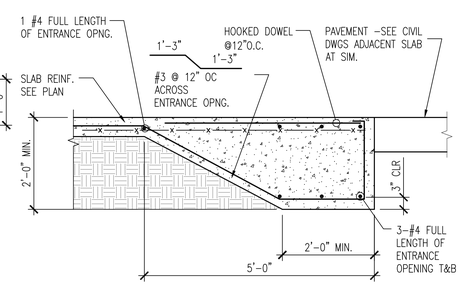

8 S5-03 EXTERIOR SLAB DETAIL @ PARKING ENTRANCE
SCALE: 3/4" = 1'-0"

THE PRESTON PARTNERSHIP, LLC
A MULTI-DISCIPLINARY DESIGN FIRM
SOUTH TERRACES
115 PERIMETER CENTER PLACE, SUITE 950
ATLANTA, GEORGIA 30346
TELEPHONE: 770 396 7248
FAX: 770 396 2945
WWW.THEPRESTONPARTNERSHIP.COM

CONSULTANT
m2 STRUCTURAL
887 West Marietta St. NW
Suite T103
Atlanta, GA 30318
www.m2structural.com
404-829-2612

SEAL
GEORGIA REGISTERED No. PE028777 PROFESSIONAL ENGINEER MICHAEL K. MURPHY

PROJECT
REVEL AT THE BALLPARK
2885 CRESCENT PKWY
SMYRNA, GA 30080

FOR
ATLANTIC REALTY PARTNERS

ATLANTIC REALTY PARTNERS
3438 PEACHTREE ROAD, SUITE 1425
ATLANTA, GA 30326
404-591-2900

ISSUE	DATE
SCHEMATIC DESIGN SET	08/28/2015
DD PROGRESS SET	10/07/2015
DD/GMP	10/15/2015
FOUNDATION PERMIT	12/07/2015
75% CDs	01/29/2016
GMP SET	04/03/2017
PERMIT SET	05/22/2017
5 BLDG PERMIT COMMENTS	10/02/2017

DATE 05/22/2017
JOB NUMBER 1493101
DRAWN BY CTK
CHECKED BY JWS
SHEET TITLE FOUNDATION DETAILS
SHEET NUMBER S5-03
COMMENTS RELEASED FOR CONSTRUCTION

© 2014 © 2015 The Preston Partnership, LLC